VOLTAGE REGULATOR

EXPERIMENT NUMBER 03

OBJECTIVES:

- Describe the operation of the voltage regulator circuit.
- Design a basic op-amp series voltage regulator with the constant current limiting mechanism.

APPARATUS:

DC power supply, 2 × multimeters, breadboard, 741 op-amp, 2 × 2N2222 transistors, 5.1 V Zener diode, 20 kΩ potentiometer, 7 Ω & 1 kΩ resistors, resistor box and Connecting wires.

THEORY AND DIAGRAMS:

A voltage regulator provides a constant output voltage that is essentially independent of the input voltage, output load current and temperature. Two basic categories of voltage regulation are line regulation and load regulation. Line regulation maintains a nearly constant output voltage when the input voltage varies, while load regulation maintains a nearly constant output voltage when the load varies. There are two types of voltage regulators: linear regulators and switching regulators. There are two types of linear regulators: series and shunt. Figure 1 shows a circuit diagram of a basic op-amp series voltage regulator.

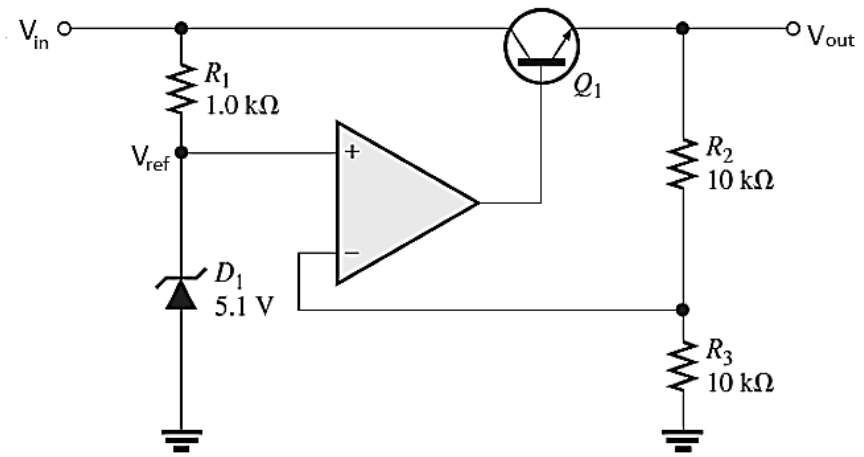

Figure 1: Basic op-amp series voltage regulator

Neglecting the base-emitter voltage of Q_1, an expression for the regulated output voltage of the series regulator can be written as follows.

$$V_{out} \cong \left(1 + \frac{R_2}{R_3}\right) V_{ref}$$

If an excessive amount of load current is drawn through the above regulator, the series-pass transistor can be quickly damaged or destroyed. Therefore, it is necessary to use some type of excess current protection in the form of a current-limiting mechanism. Figure 2 shows a circuit diagram of a basic op-amp series voltage regulator with the constant current limiting mechanism.

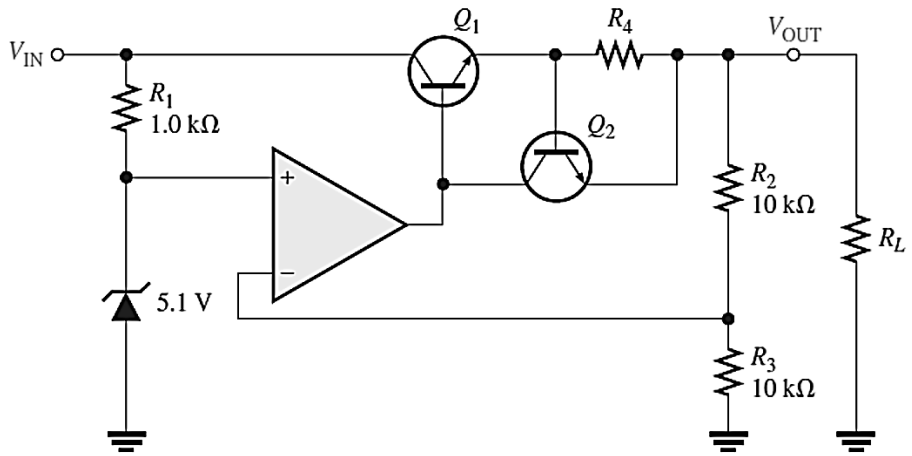

Figure 2: Series regulator with constant current limiting

Assuming $V_{BE(max)} = 0.7\ V$ of Q_2, an expression for the maximum load current, $I_{L(max)}$ can be written as follows.

$$I_{L(max)} = \frac{0.7}{R_4}$$

PROCEDURE:

1. Connect the circuit as shown in Figure 1. Use 20 kΩ potentiometer instead of R_2 and R_3. Connect the resistor box as the load and voltmeter to measure the output voltage.
2. Set the load resistance to 1 kΩ and the power supply voltage to 12 V. Use the same single DC 12 V supply for the op-amp, too.
3. Turn ON the power supply to the circuit and vary the potentiometer so that the output voltage becomes 10 V.
4. Now, vary the load resistance as given in Table 1 and measure the output voltage. Tabulate your results and plot the graph of output voltage vs. the load resistance.
5. Set the load resistance back to 1 kΩ and vary the input voltage as given in Table 2.
6. Measure the output voltage and tabulate your results.
7. Plot the graph of output voltage vs. input voltage.
8. Remove the power supply and reconnect the regulator circuit with the constant current limiting mechanism, as shown in Figure 2.
9. Connect an ammeter to measure the load current. Set the load resistance to 1 kΩ.
10. Set the power supply voltage to 12 V and Turn it ON.

11. Vary the potentiometer again so that the output voltage becomes 10 V if needed.
12. Now, vary the load resistance as given in Table 3 and measure the load current and voltage. Tabulate your results and plot the graphs of load current and load voltage vs. load resistance on a single graph sheet.

Sample Data Sheets:

Table 1

Load Resistance (Ω)	**Output Voltage (V)**
100	
300	
500	
800	
1000	
2000	
3000	
4000	

Table 2

Input Voltage (V)	**Output Voltage (V)**
12.0	
13.0	
14.0	
15.0	
16.0	
17.0	

Table 3

Load Resistance (Ω)	**Load Current (A)**	**Output Voltage (V)**
1000		
800		
500		
300		
100		
90		
80		
70		
60		
50		
40		

DISCUSSION:

1. Explain the operation of the circuit shown in Figure 1.
2. Discuss line and load regulation of your circuit using your results.
3. Explain the constant current limiting mechanism of the circuit shown in Figure 2.
4. Discuss the short circuit and overload protection features using your results.
5. Discuss the different types, features and characteristics of linear and switching regulators and discuss their applications.